Smart Lighting System

Bradley University
Department of Electrical and Computer Engineering
Authors: Alexander Berian, Dustin McCart
Project Advisor: Aleksander Malinowski
Date: November 20 2015

Overview

- Problem Description
- Division of Labor
- System Block Diagram

Problem Description

- Smart light switch
  - Replace ordinary light switches
- Pattern recognition and utilization
- Android smartphone application
  - Bluetooth
  - Wi-Fi
- User interface panel
  - Buttons and Switches
- Controlling high voltage lights
  - Light control circuit

http://www.fryeelectricinc.com

Division of Labor

Alex Berian		Dustin McCart	
All hardware	C	Initial basic programming	C
Bluetooth communication	P	Mode programming	P
Wi-Fi and internet communication	N	Data storage	P
Smartphone application	P		

Completed (C), In Progress (P), Not Started (N)

System Block Diagram

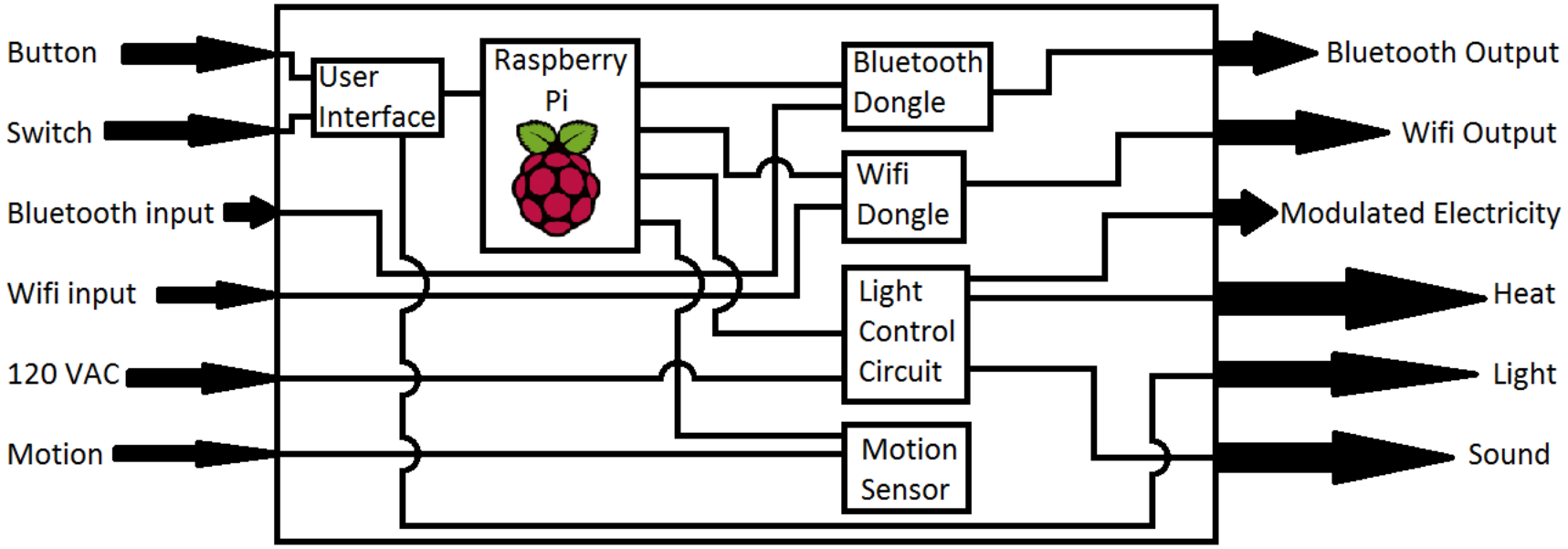

Progress

Alex Berian

- Schedule
- Work completed
  - Light control circuit
  - User interface + Motion sensor

Schedule

Task name	Start	End	Percent Complete (10 20 30 40 50 60 70 80 100)
Basic software	9/15/2015	9/22/2015	100% complete
Hardware circuit	9/15/2015	9/22/2015	100% complete
Bluetooth communication	9/24/2015	10/20/2015	60% complete
Android app	10/22/2015	1/21/2016	10% complete
Wi-Fi communication	1/26/2016	2/23/2016	
Final testing	2/11/2016	3/15/2016	

Light Control Circuit

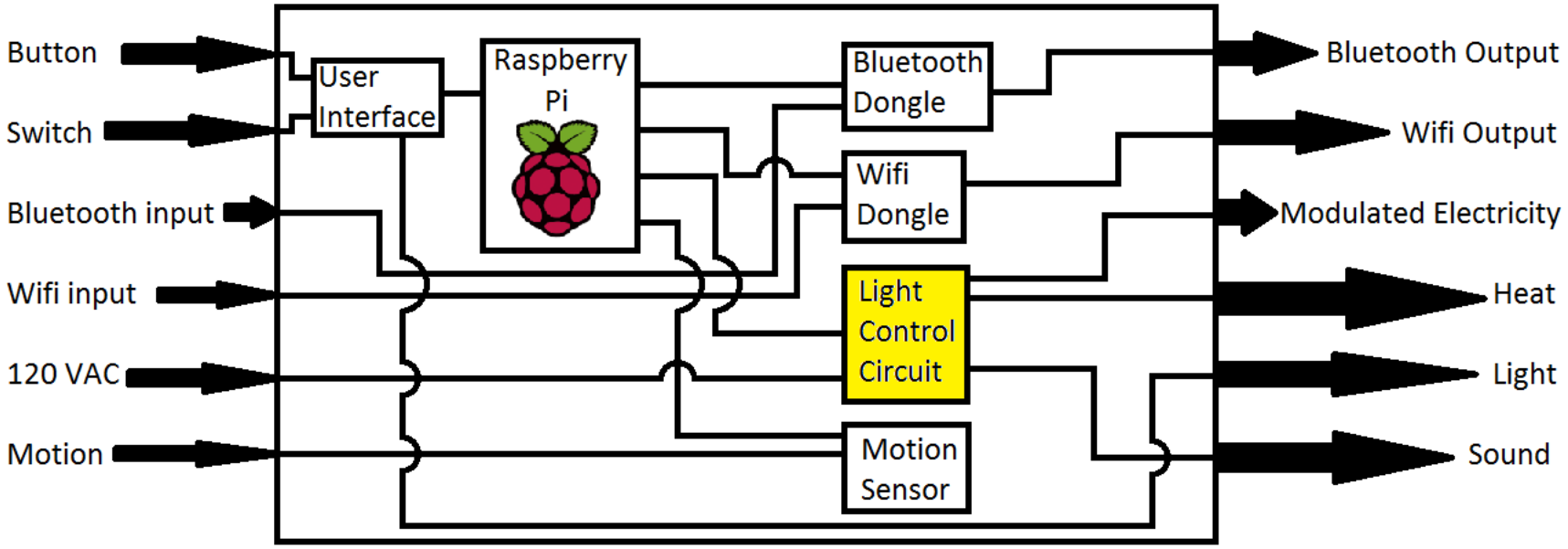

Light Control Circuit: Design

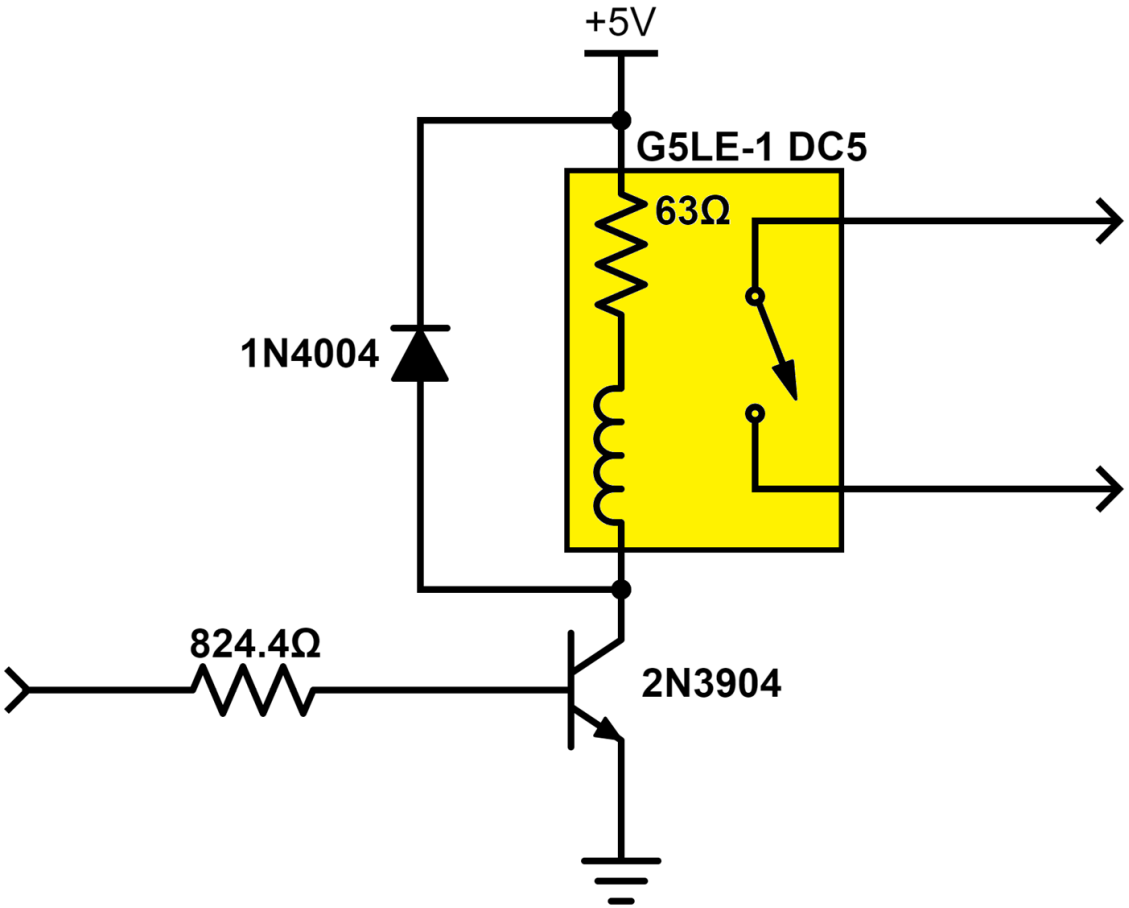

- Transistor
  - 2N3904
- Relay switch
  - G5LE-1 DC5
- Diode
  - 1N4004

Light Control Circuit: Testing

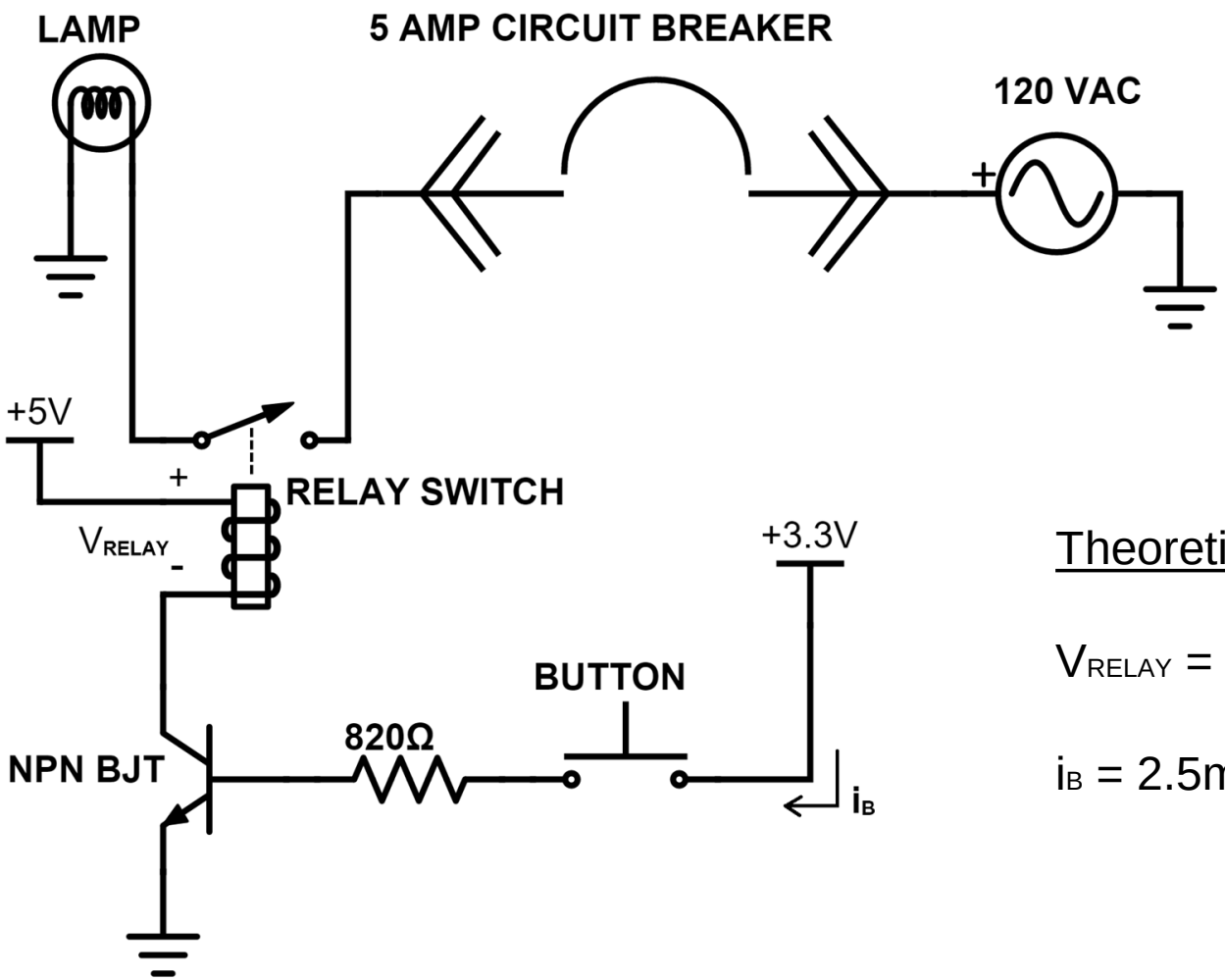

Theoretical	Experimental
V_{RELAY} = 4.7V	V_{RELAY} = 4.73V
i_B = 2.5mA	i_B = 2.56mA

User Interface + Motion Sensor

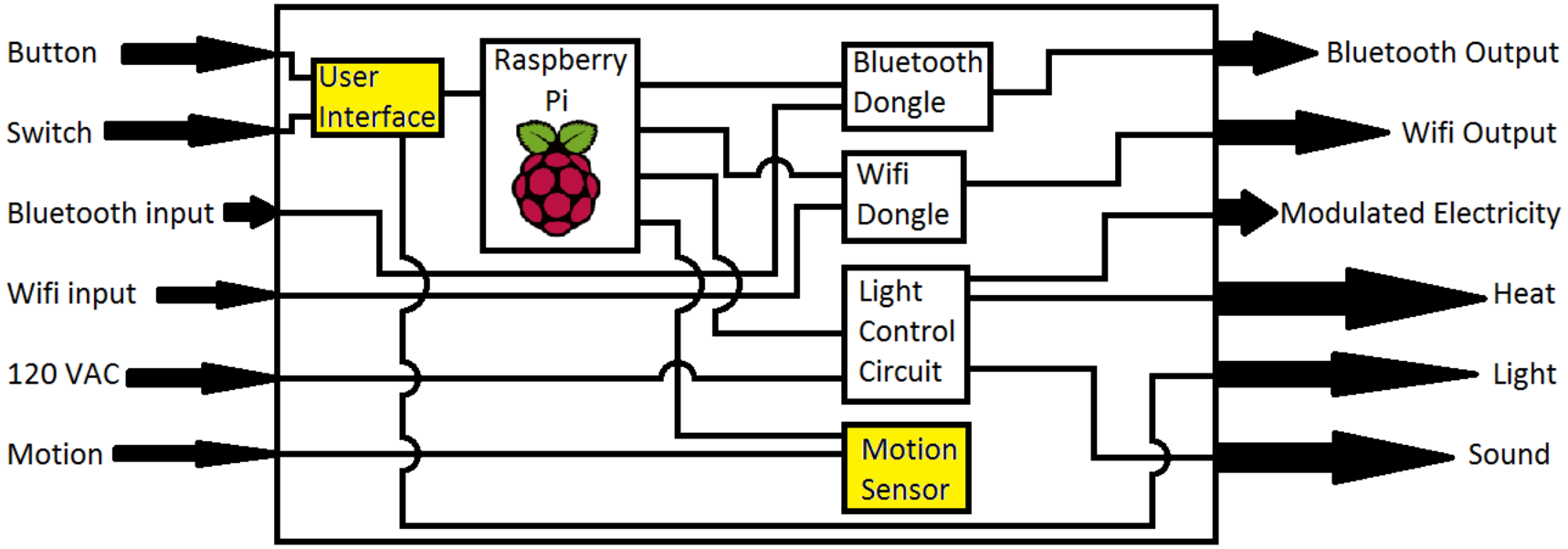

User Interface + Motion Sensor: Design

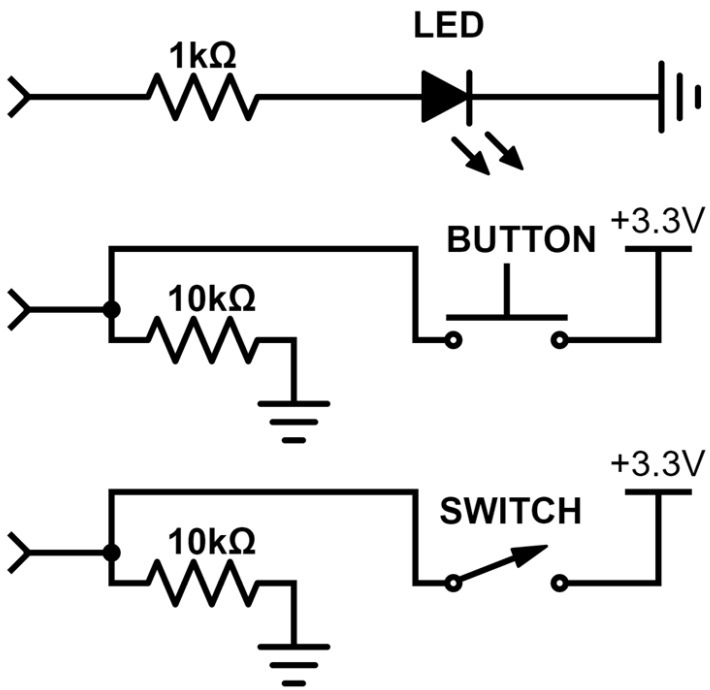

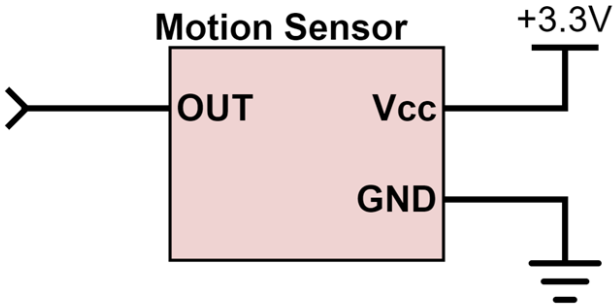

- LED
  - C5SME-RJS
- Button
  - 401-1967-ND
- Switch
  - 100SP1T1B4M2QE
- Motion Sensor
  - leegoal Pyroelectric Infrared PIR

User Interface Circuit

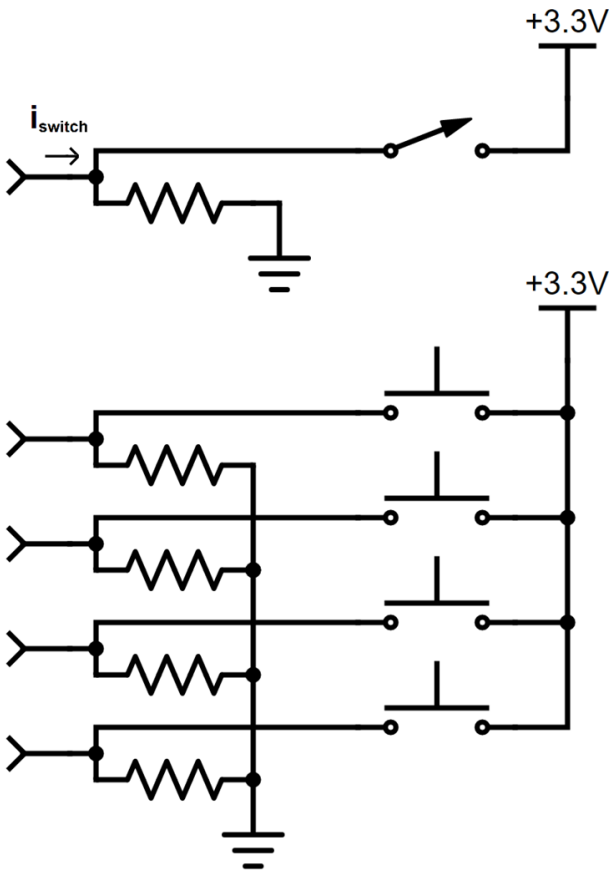

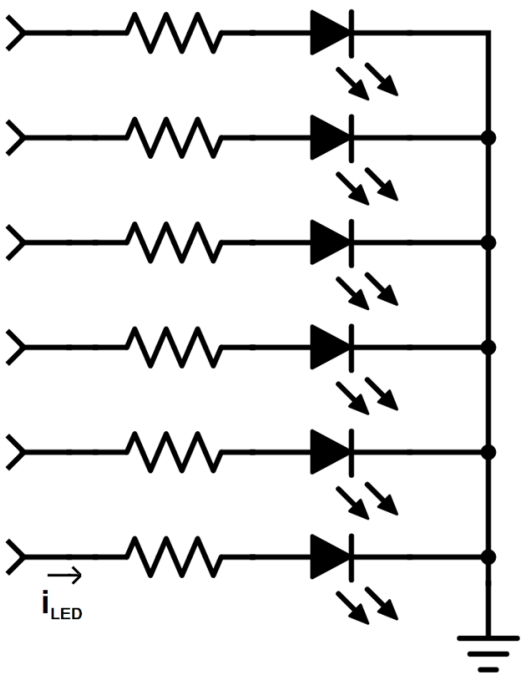

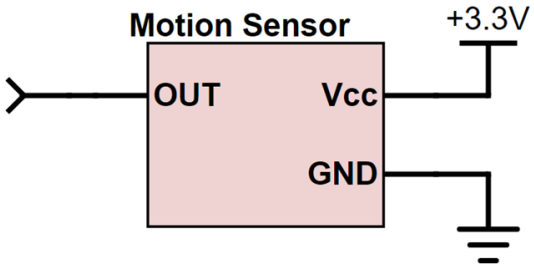

Theoretical

i_{LED} = 1.8mA

$i_{switch\ on}$ = 0.33mA

$i_{switch\ off}$ = 0A

Experimental

i_{LED} = 1.127mA

$i_{switch\ on}$ = 0.303mA

$i_{switch\ off}$ = 0.56μA

Progress

Dustin McCart

- Work completed
  - Pin state setting
- Work remaining
  - Data storage finalization
  - Prediction algorithm
  - Mode create
  - Combine all part into final program

Schedule

Task name	Start	End	Percent Complete (10 20 30 40 50 60 70 80 90 100)
Basic software	9/15/2015	9/22/2015	100% complete
Communication with inputs	9/24/2015	10/20/2015	100% complete
Prediction Algorithm	10/22/2015	11/17/2015	87.5% complete
Data storage	11/19/2015	12/8/2015	83.3% complete
Mode Creation	1/21/2016	2/9/2016	
Combining Software	2/11/2016	2/16/2016	
Final testing	2/11/2016	3/15/2016	

Pin Communication Information

Utilizes wiringPI Library

- Inputs
  - Toggle switches
  - Motion sensor
  - 4 Push buttons
- Outputs
  - Light control signal
  - Indicator LED status

Communication Progress

- Final test of board pin communication program

Prediction Algorithm Information

- Using Transition Probability
- Based on Master Thesis By Rolf Heukels
  - Predicting user behavior using transition probability
- Algorithm
  - It is a three step algorithm

Algorithm First Step

- First step is initial point distribution
- Factors used in calculation:
  - Number of occurrences of each state
  - Similarity to current state

Algorithm Second Step

- Second step is redistribution of points
- Factors used in calculation:
  - Current time
  - Scope of scan
  - Past transitions
  - Total number of occurrences

Algorithm Third Step

- Third step creates the actual prediction
- Factors used in calculation:
  - Total number of points
  - Item to be predicted
  - All states definitions

Prediction Program Progress

- Reading thesis to understand algorithm
- MATLAB programming
- MATLAB testing
- C++ programming
  - Crosses with data storage development
- Testing C++ program with test project
- Comparing with MATLAB results and debugging

Data Storage Program Information

- Items being stored are two arrays
- Method chosen in class
- Utilizes the C++ vector library

Storage Program Progress

- Looked for different ways to store data
- Create basic program
- Asked Dr. Malinowski for information on creating class template for data storage
- Converted storage method to class template
- Created functions to interact with storage arrays

Conclusion

- Overall Team Progress

Overall Team Progress

Task name	Start	End	Percent complete (10 20 30 40 50 60 70 80 90 100)
Basic software	9/15/2015	9/22/2015	100% complete
Commuication with inputs	9/24/2015	10/20/2015	100% complete
Prediction algorithm	10/22/2015	11/17/2015	87.5% complete
Data storage	11/19/2015	12/8/2015	83.3% complete
Mode creation	1/21/2016	2/9/2016	
Combining software	2/11/2016	2/16/2016	
Hardware circuit	9/15/2015	9/22/2015	100% complete
Bluetooth communication	9/24/2015	10/20/2015	60% complete
Android app	10/22/2015	1/21/2016	10% complete
Wi-Fi communication	1/26/2016	2/23/2016	
Final testing	2/11/2016	3/15/2016	

Questions & Answers

- Alex Berian
- Dustin McCart
- Team

Extra Slides

Alex Berian

User Interface Circuit Test

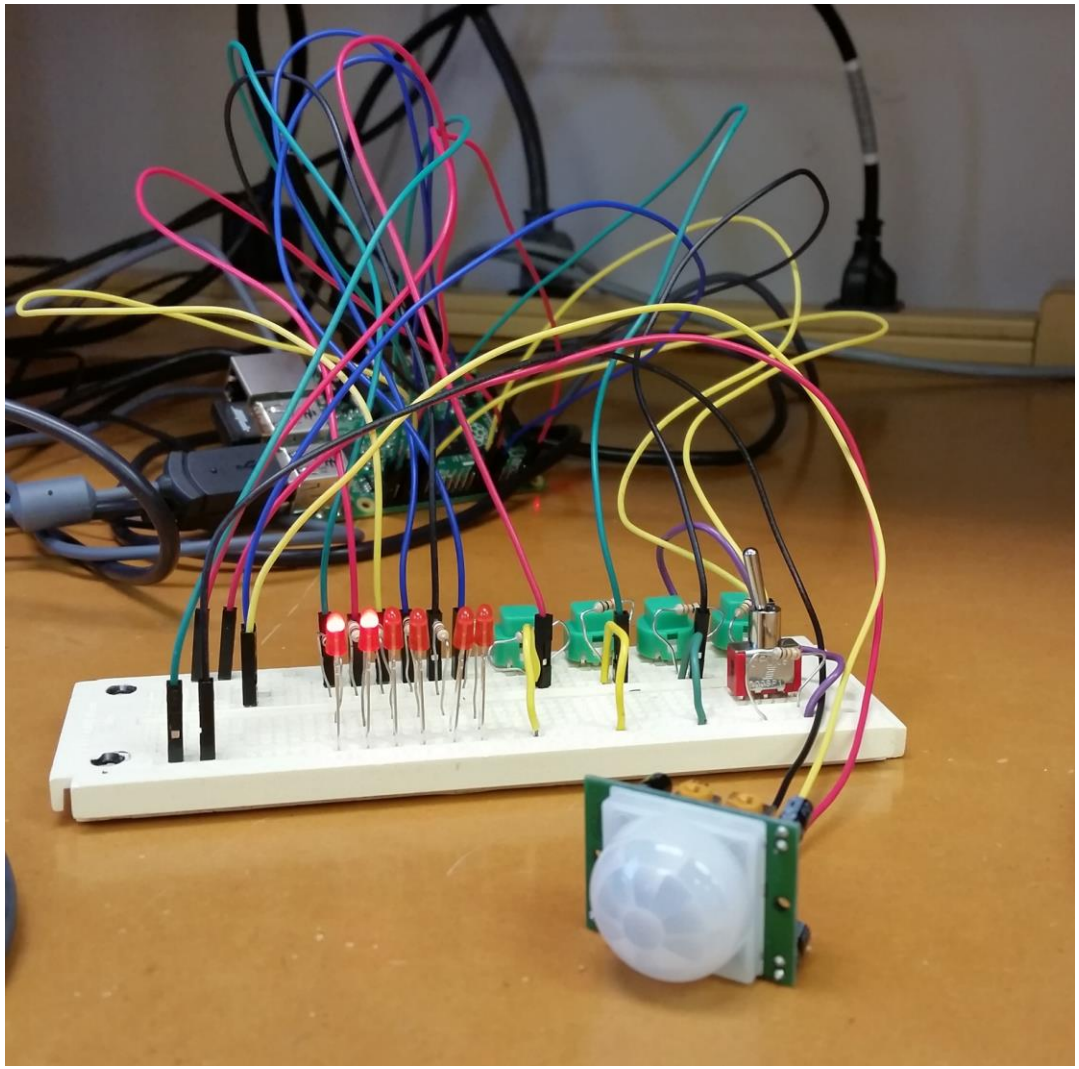

Motion Sensor Output

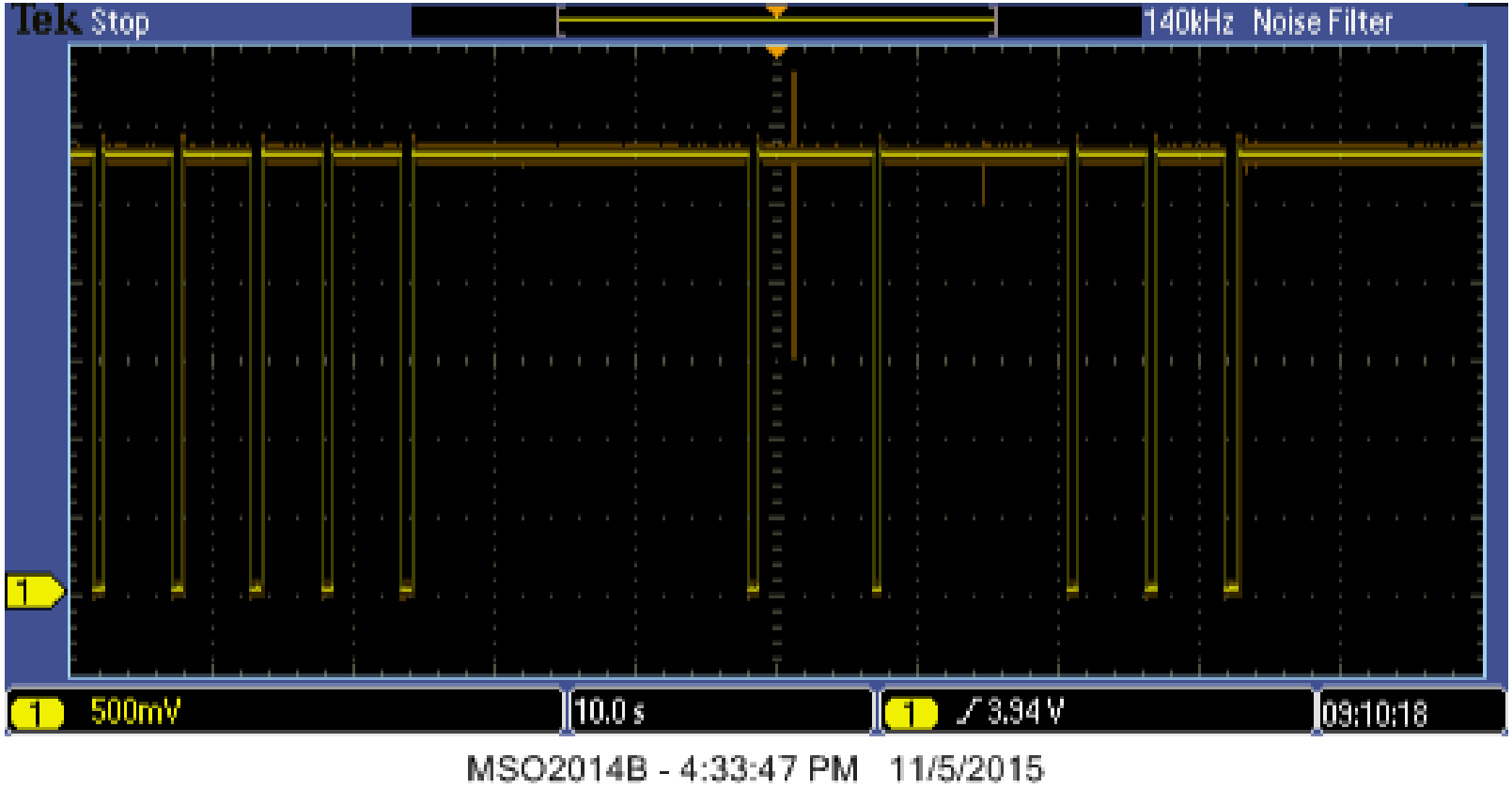

Android Application Layout

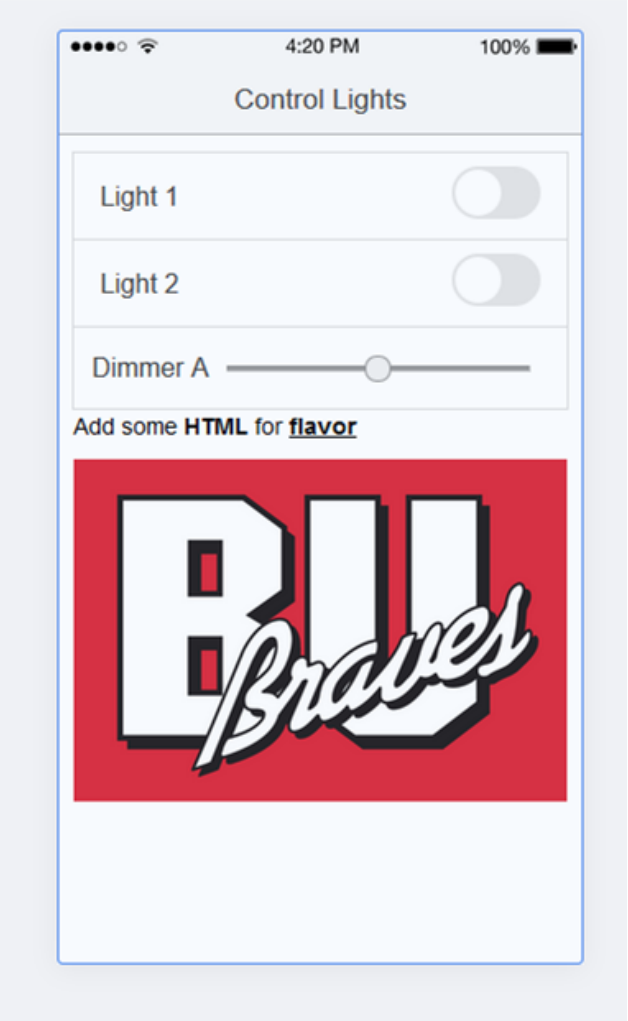

Light Control Circuit Test Setup

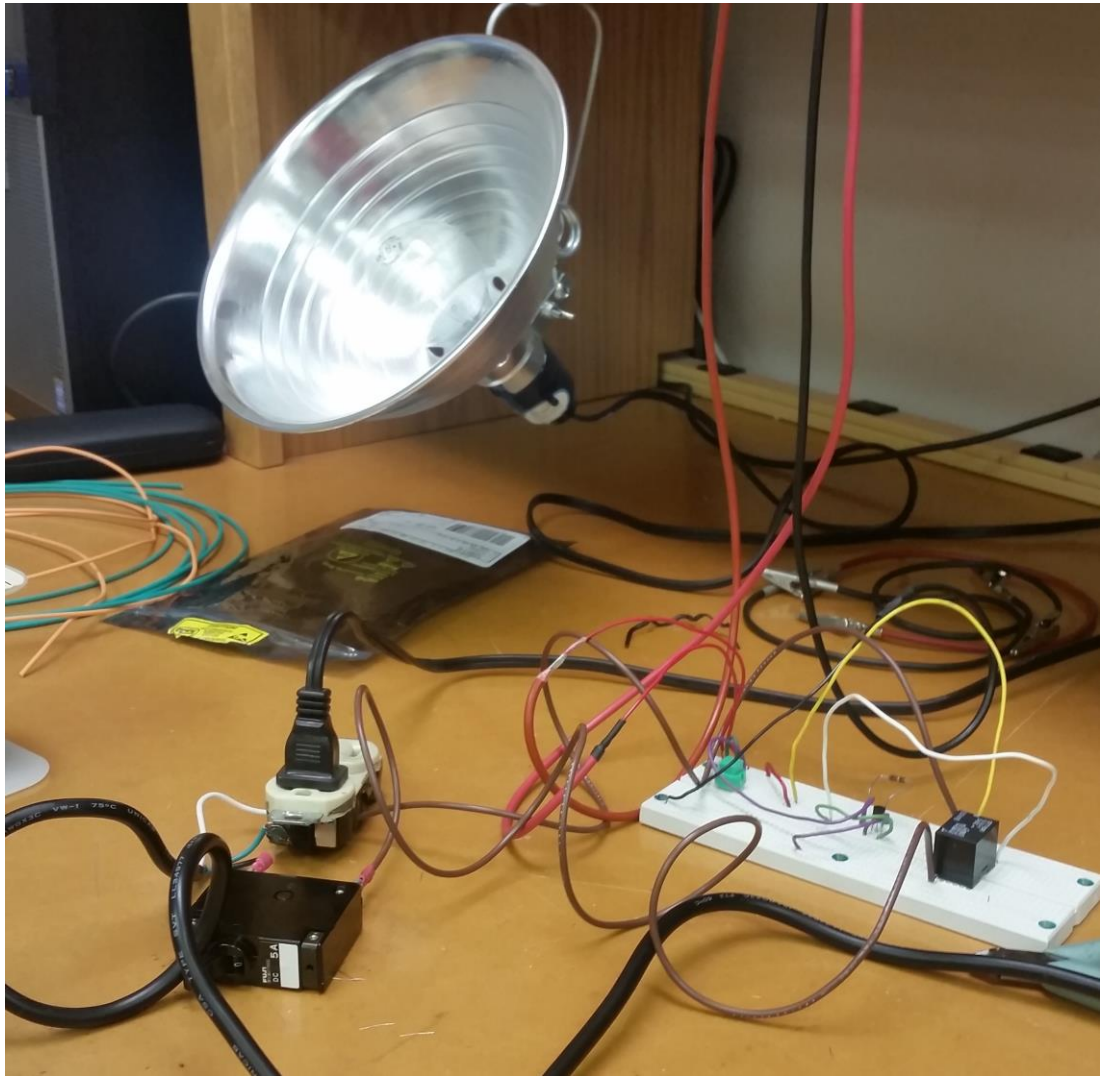

Relay Coil Voltage Spike

Light Control Circuit Calculations

Relay Switch data sheet

$V_R \approx 5v$

$R_L = 63\Omega$

NPN BJT Datasheet

$V_{CE} = 0.3v$

$V_{BE} = 0.95v$

$\beta = 30$

RaspBerry Pi data Sheet

$V_{Pi} = 3.0v$ min

$V_R = 5v - V_{CE} = 4.7v$

$i_c = V_R / R_L = 74.6mA$

$i_B = i_c / \beta = 2.5mA$

$R_B = (V_{Pi} - V_{BE}) / i_B = 824.4\Omega$

$P_{RB} = i_B^2 R_B = 5.1mW$

$P_{BJT} = i_c V_{CE} + i_B V_{BE} = 24.7mW$

$P_R = i_c V_R = 350.6mW$

$P_{Total} = P_{RB} + P_{BJT} + P_R = 380.5mW$

User Interface Circuit Calculations

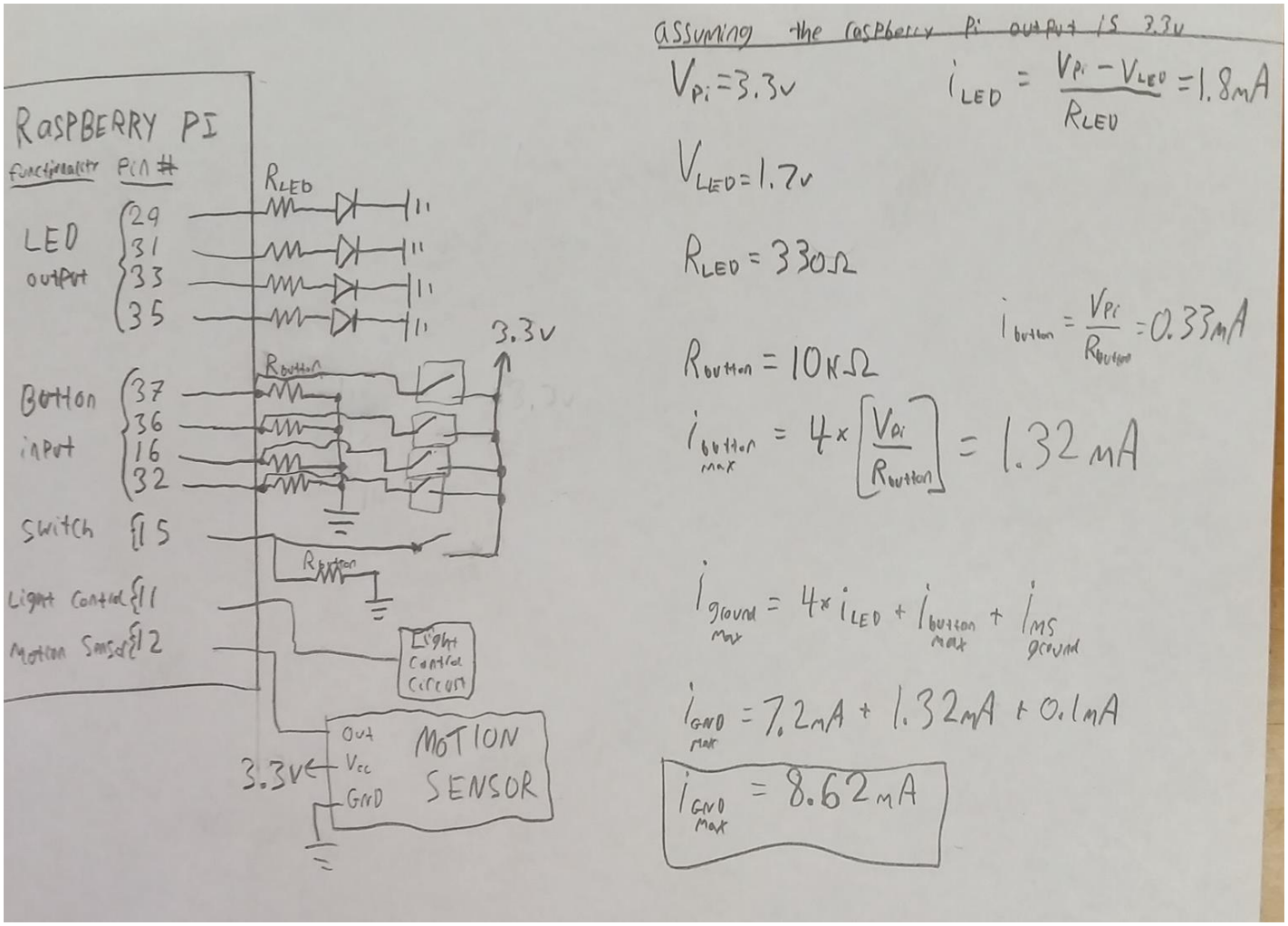

Extra Slides

Dustin McCart
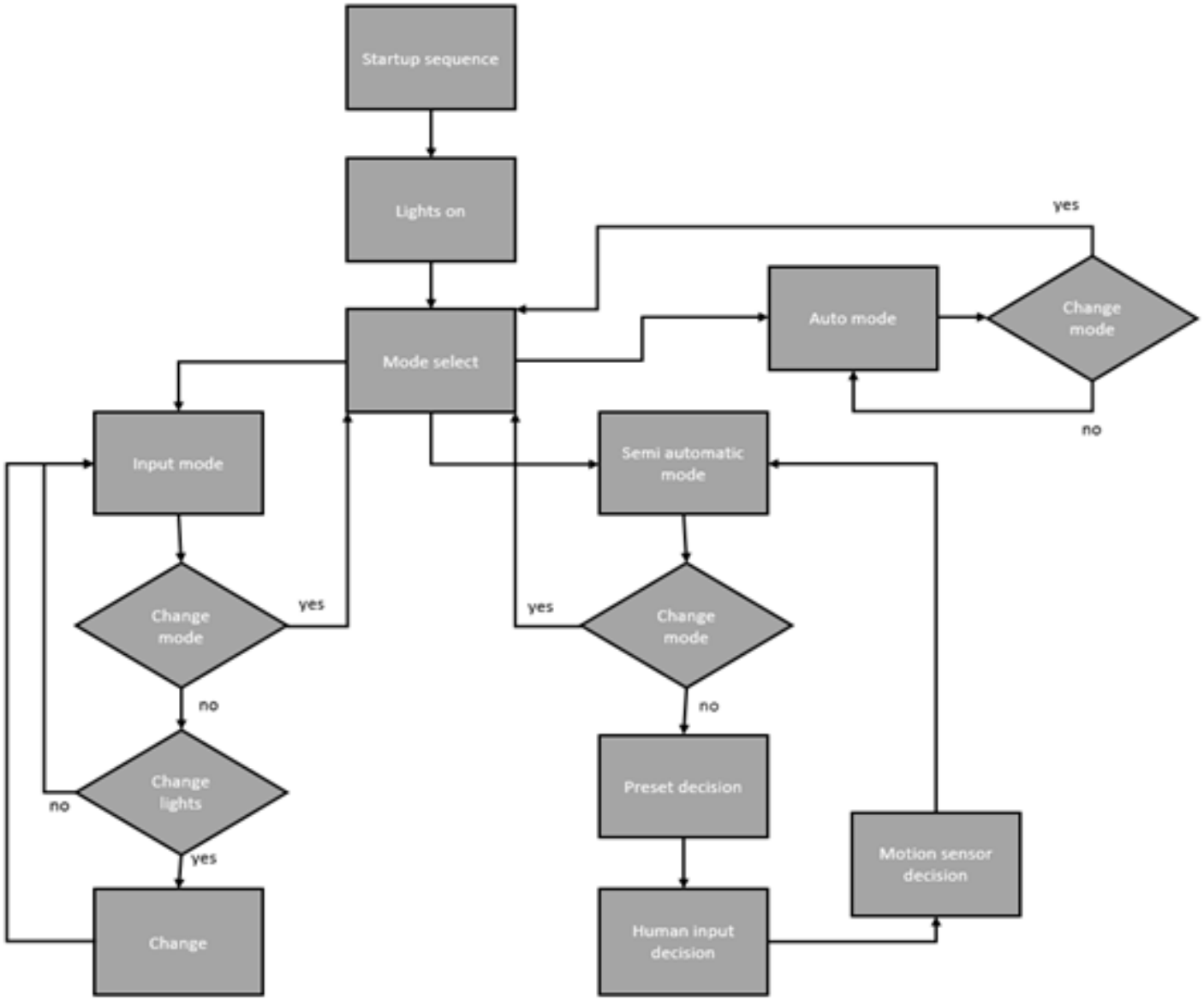
System Flow Chart