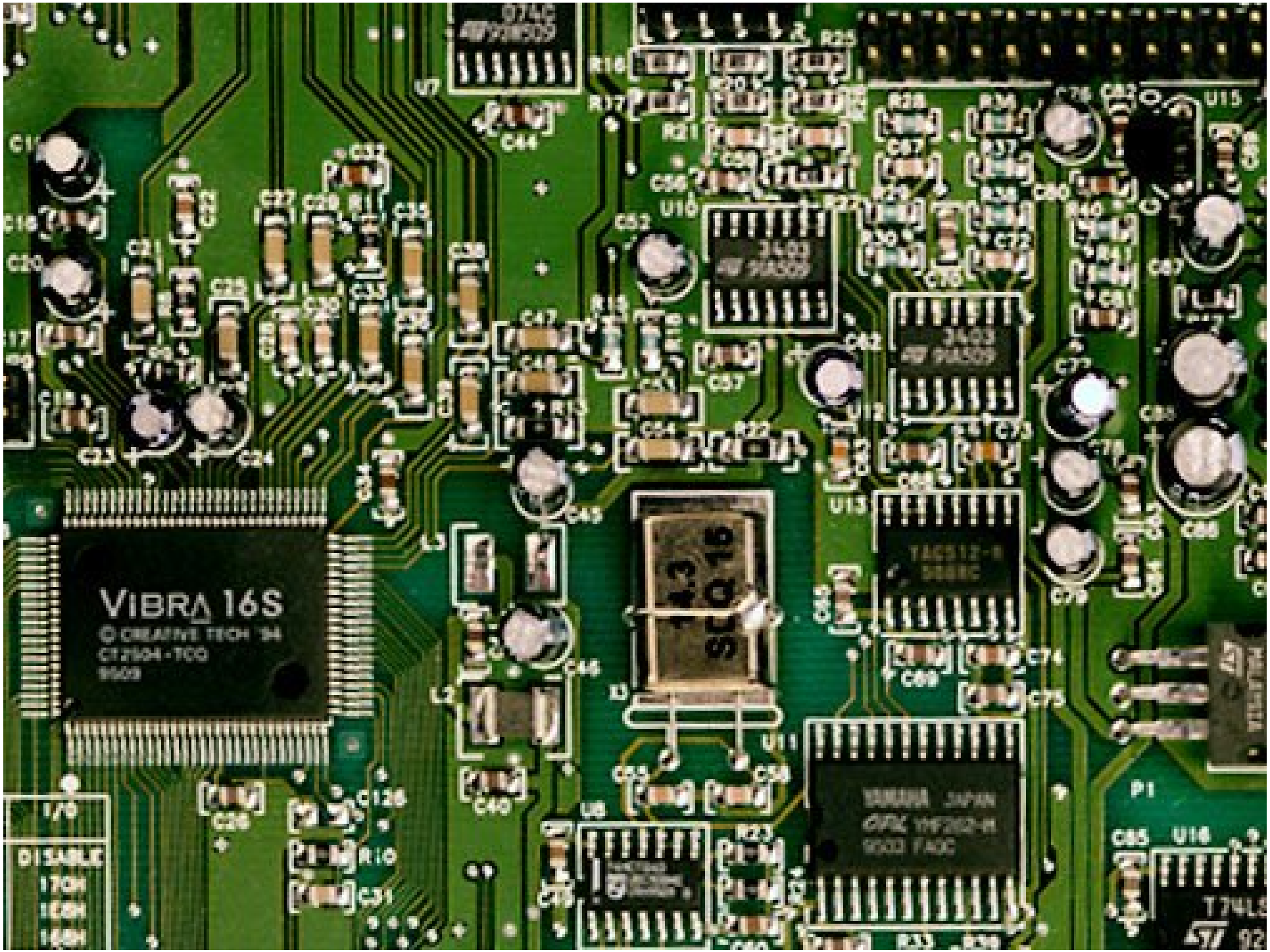
VIBRA 16S
© CREATIVE TECH '94
CT2504-TCQ
9509
YAMAHA JAPAN
DISABLE
170H
1E8H
168H
P1
U15
U16
U13
U11
U10
U7
U8
U12

Truck Loading Using an Autonomous End-Loader

Senior Project Spring 2008

Kevin Hurley

Ryan Leman

Bradley University

EE 452: Senior Laboratory

Advisor: Dr. Schertz

Overview

- Project Overview
- Project Goals
- Original Schedule
- Accomplishments
- Next Steps
- Updated Schedule

Overview

- Project Overview
- Project Goals
- Original Schedule
- Accomplishments
- Next Steps
- Updated Schedule

Overall System Block Diagram

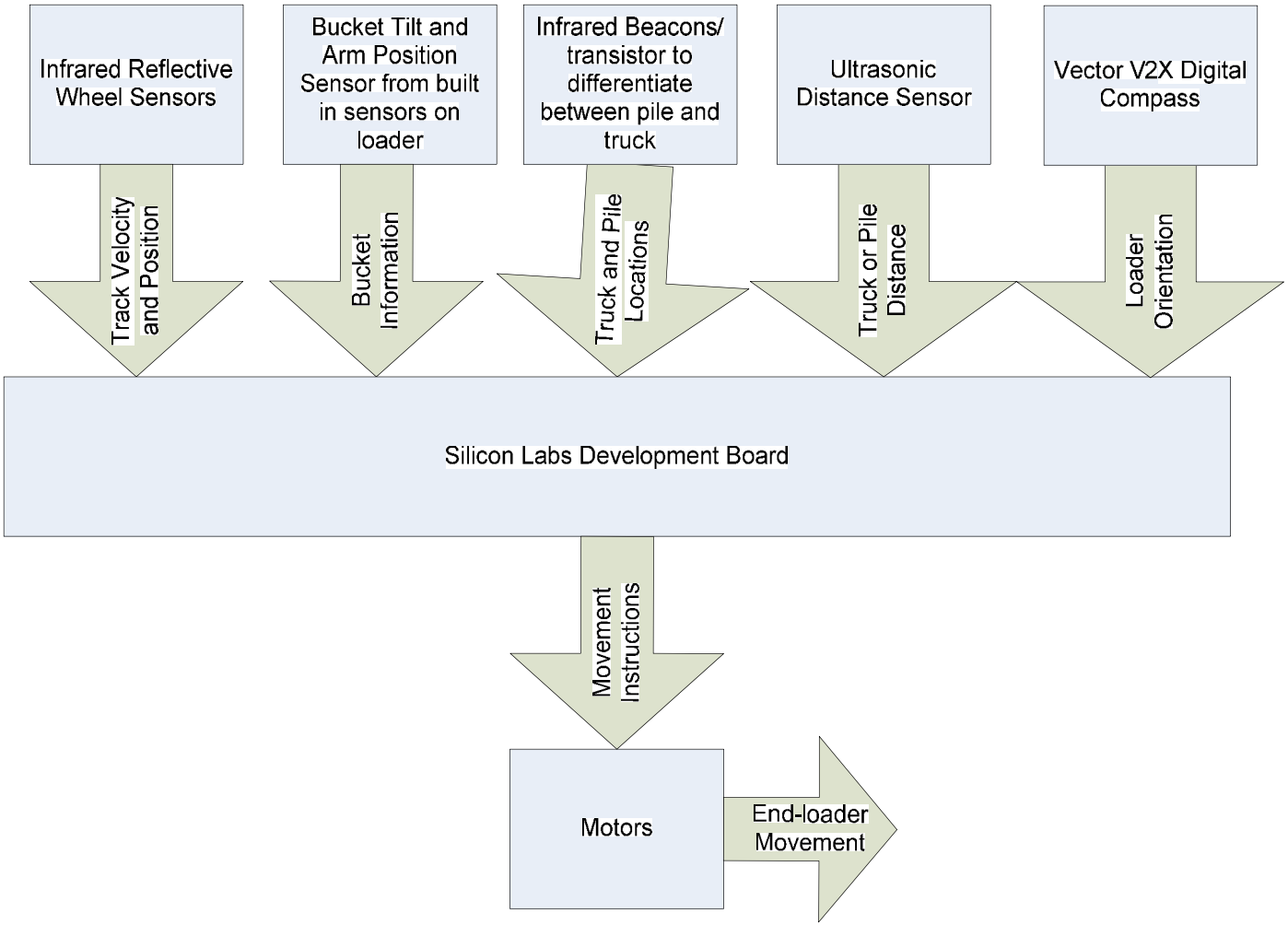

Overview

- Project Overview
- Project Goals
- Original Schedule
- Accomplishments
- Next Steps
- Updated Schedule

Project Goals

- Hardware
  - Determine and Mount Sensors
    - Pile and truck identifiers
    - Distance sensors
    - Speed and vehicle distance
    - Direction/compass
  - Drive Electronics
  - Design and Implement Circuitry

Project Goals

- Software
  - Locate Pile
  - Navigate to Pile
  - Scoop a Load
  - Locate Truck
  - Navigate to Truck
  - Dump load in Truck

Overview

- Project Overview
- Project Goals
- Original Schedule
- Accomplishments
- Next Steps
- Updated Schedule

Task Schedule

Lab Period	Overall Tasks/Goals	Kevin	Ryan
1/29	sensor mount and test	vehicle modification	vehicle modification
2/5	sensor mount and test	drive electronics	sensor installation
2/12	sensor mount and test	drive electronics	sensor installation
2/19	hardware	circuit board mounting	circuit board mounting
2/26	hardware	testing	testing
3/4	software	pwm generation	interpret sensor data
3/11	software	pwm generation	find truck or pile
3/25	software	navigate to pile or truck	navigate to pile or truck
4/1	software	scoop/dump	scoop/dump
4/8	debug/test	testing	testing
4/15	debug/test	debugging	debugging
4/22	debug/test	debugging	debugging
4/29	final presentation prep	Final Presentation and Report Preparation	
5/6	final presentation	Final Presentation	

Overview

- Project Overview
- Project Goals
- Original Schedule
- Accomplishments
- Next Steps
- Updated Schedule

Ultrasonic Sensor

- SRF05 Ultrasonic Sensor
- Output is a pulse – the width in uS/148 = inches to object
- Accurate to around 4 feet, down to less than half of an inch
- On-board Testing

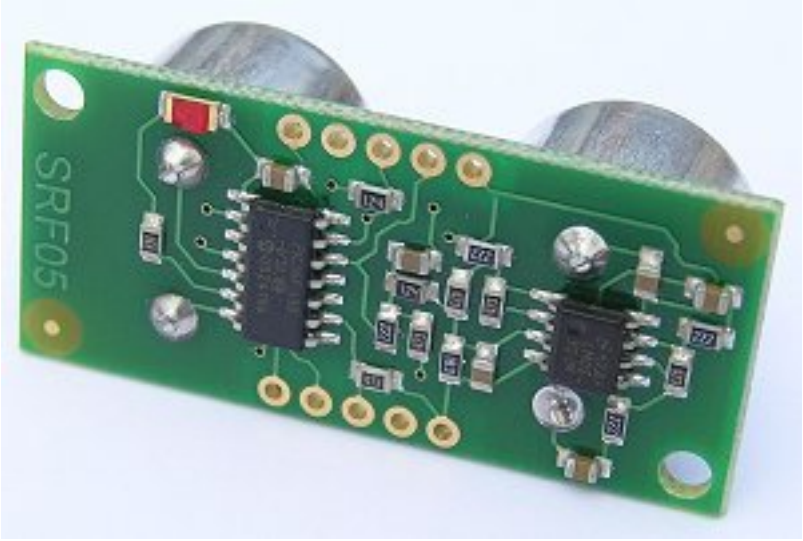

Infrared Beacons and Transistor

- Current to Voltage Converter
- High gain with LPF to limit noise amplification
- Increased range to 3 feet
- On-board Testing
  - Location
  - Shielding
- Schmitt Trigger to clean up signal to TTL output

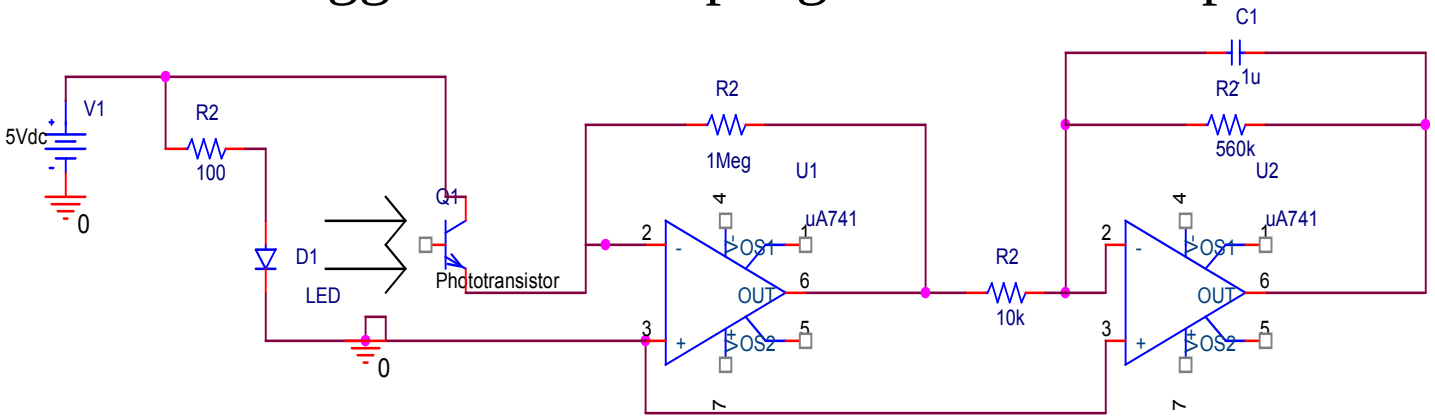

Vector V2X Digital Compass

- Direction to approach truck and load from
- Outputs pulse train based on clock output
- Accuracy Testing
- Mounting location

Infrared Reflective Sensors

- Current sensor (HOA010149-1) is smaller than original sensor - QRB1134
- Printed pinwheels to mount on wheel
- Schmitt trigger to clean up signal to TTL output
- Mounting location investigation

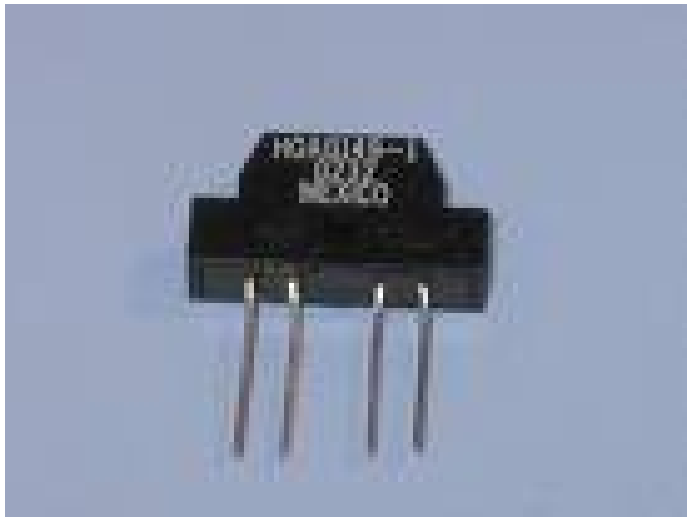

Vehicle Bucket Sensors

- Limit sensors included on vehicle will be used to stop bucket movement at limits
- AND the sensor output with the bucket drive command signal

Drive Electronics

- L293 Quad Half H-Bridge
- Allows control of motors with 0-5V PWM
- Outputs high current 7.2 V from battery to drive motors

Voltage Regulation

- 4245A Bidirectional Translator
  - 3.3V to 5V
  - 5V to 3.3V
- MC7805 Voltage Regulator
  - 7.2V to 5V

Circuit Board Layout

- Designed board similar size to microprocessor
- Will be mounted inside modified cab of vehicle
- Compass mounted separately on top of cab
- Wire wrapping and soldering is nearly completed

2 Boards:
Board 1: 4 “ X 3.7 “
Board 2: 2.5” X 2.5"
Mounting holes shown in corners, not to scale

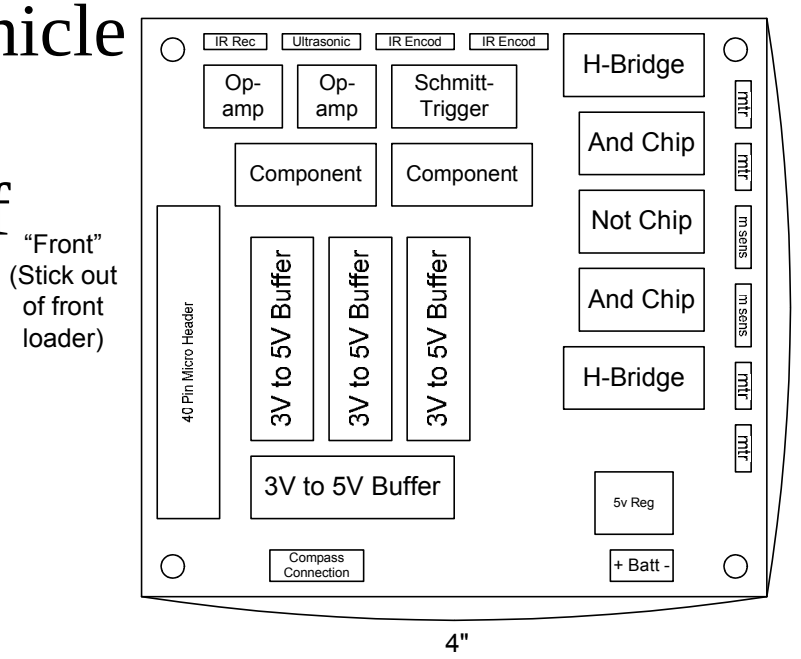

Circuit Board Layout

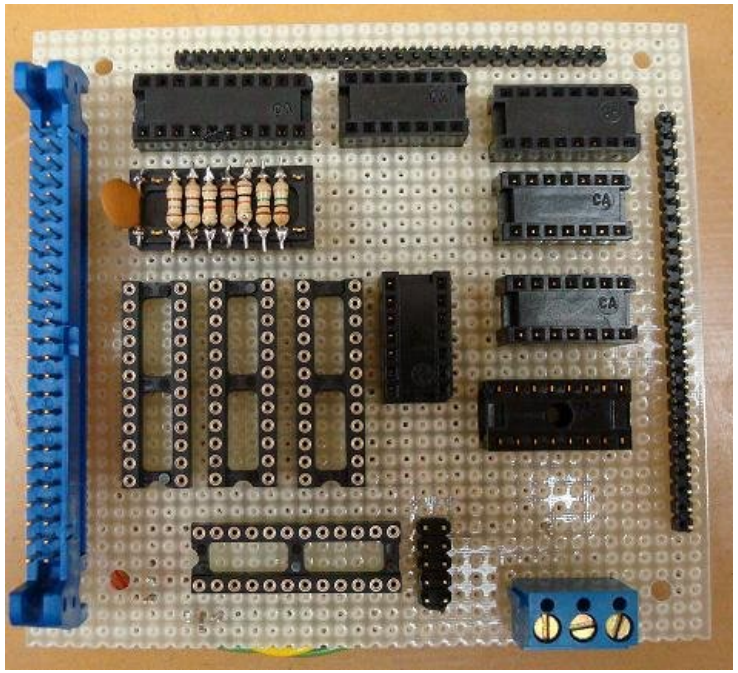

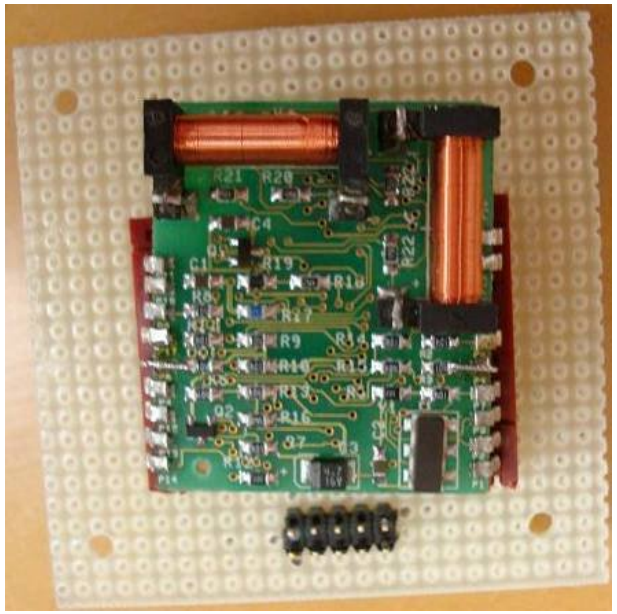

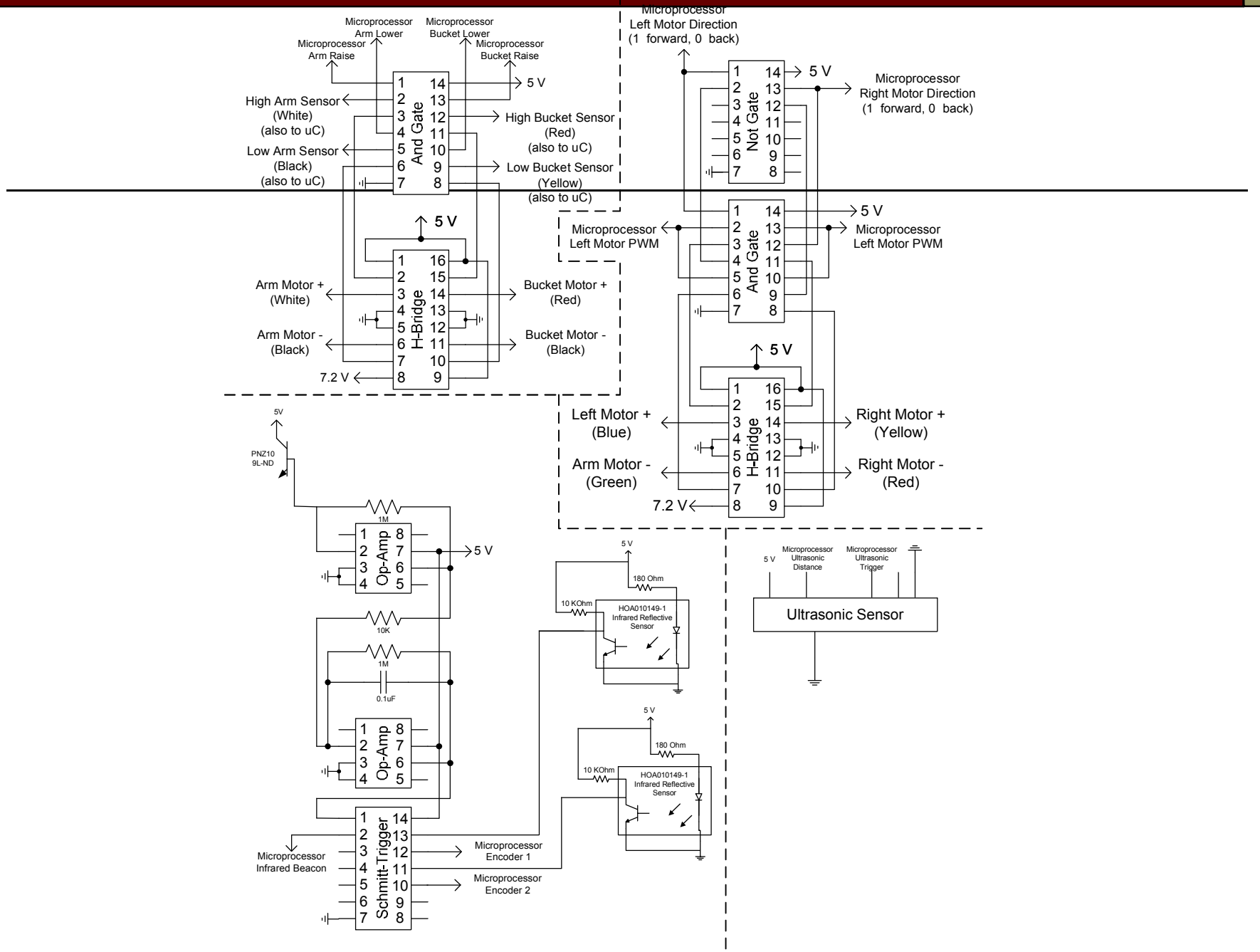
Microprocessor Arm Lower
Microprocessor Bucket Lower
Microprocessor Arm Raise
Microprocessor Bucket Raise
5 V
High Arm Sensor (White) (also to uC)
High Bucket Sensor (Red) (also to uC)
Low Arm Sensor (Black) (also to uC)
Low Bucket Sensor (Yellow) (also to uC)
And Gate
Microprocessor Left Motor Direction (1 forward, 0 back)
Not Gate
Microprocessor Right Motor Direction (1 forward, 0 back)
Microprocessor Left Motor PWM
Arm Motor + (White)
Arm Motor - (Black)
Bucket Motor + (Red)
Bucket Motor - (Black)
7.2 V
H-Bridge
Left Motor + (Blue)
Arm Motor - (Green)
Right Motor + (Yellow)
Right Motor - (Red)
PNZ10 9L-ND
1M
Op-Amp
10K
0.1uF
180 Ohm
10 KOhm
HOA010149-1 Infrared Reflective Sensor
Microprocessor Ultrasonic Distance
Microprocessor Ultrasonic Trigger
Ultrasonic Sensor
Schmitt-Trigger
Microprocessor Infrared Beacon
Microprocessor Encoder 1
Microprocessor Encoder 2

Overview

- Project Overview
- Project Goals
- Original Schedule
- Accomplishments
- Next Steps
- Updated Schedule

Next Steps

- Complete circuit board
  - Wire wrapping
  - Mounting
  - Final testing
    - Circuitry
    - Motor effects on compass
- Sensor mounting in previously determined locations
  - Ultrasonic
  - Infrared Sensors
  - Reflective Sensors

Next Steps

- Software
  - Locate Pile
  - Navigate to Pile
  - Scoop a Load
  - Locate Truck
  - Navigate to Truck
  - Dump load in Truck
- Debug and Test

Overview

- Project Overview
- Project Goals
- Original Schedule
- Accomplishments
- Next Steps
- Updated Schedule

Task Schedule

Lab Period	Overall Tasks/Goals	Kevin	Ryan
3/4	hardware	Wire wrapping	Sensor mounting
3/11	software	Sensor interpretation	Sensor interpretation
3/25	software	pwm generation	find truck or pile
4/1	software	navigate to pile or truck	navigate to pile or truck
4/8	software	scoop/dump	scoop/dump
4/15	debug/test	debugging	debugging
4/22	debug/test	Testing/debugging	Testing/debugging
4/29	final presentation prep	Final Presentation and Report Preparation	
5/6	final presentation	Final Presentation	

Questions